REVISIONS				
ZONE	REV	DESCRIPTION	DATE	APPROVED
153	01	Electrical Revision	07/27/23	PCW
155	02	Electrial & BOM Revision (New Timer)	12/17/24	PCW

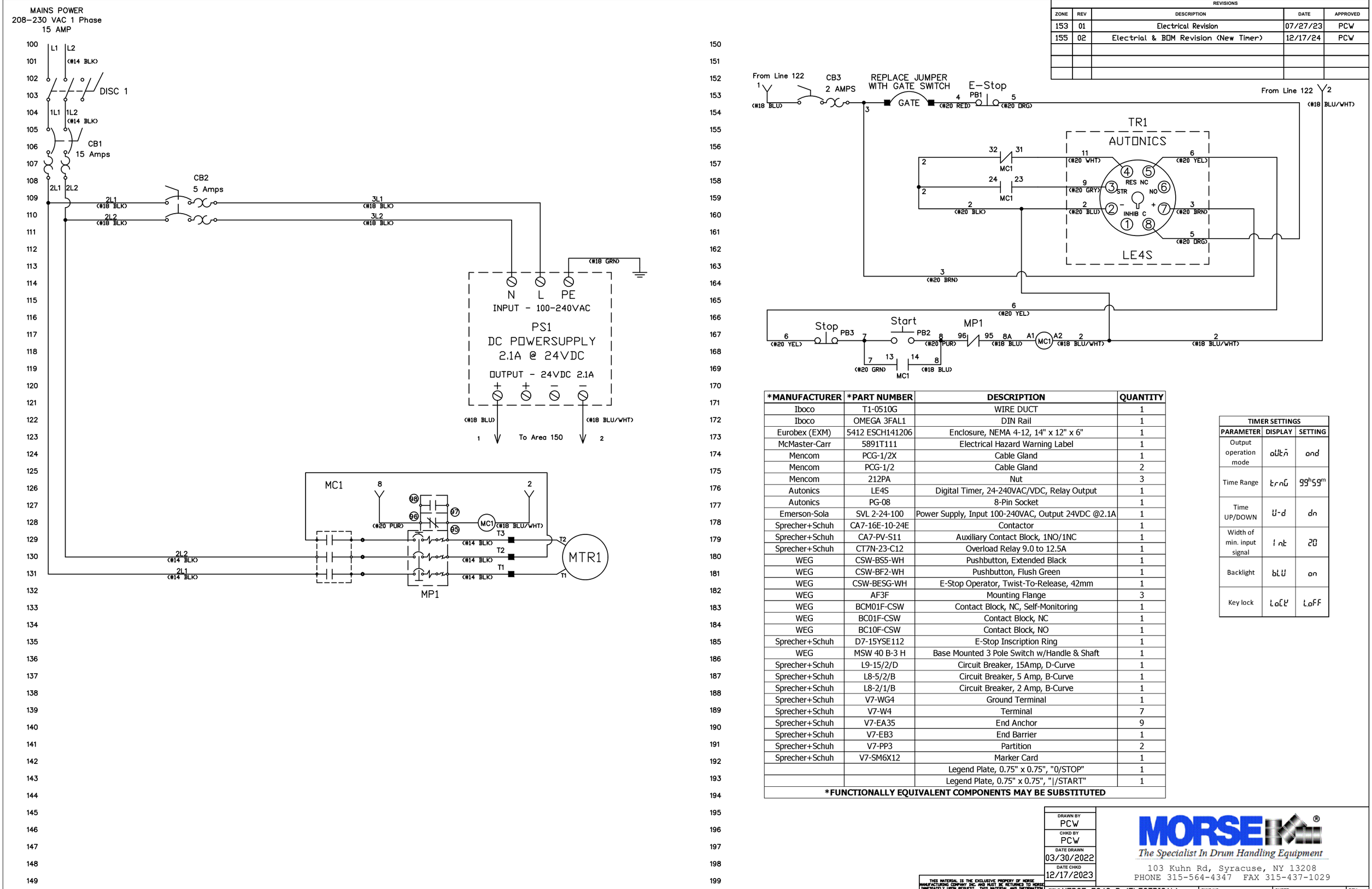

*MANUFACTURER	*PART NUMBER	DESCRIPTION	QUANTITY
Iboco	T1-0510G	WIRE DUCT	1
Iboco	OMEGA 3FAL1	DIN Rail	1
Eurobex (EXM)	5412 ESCH141206	Enclosure, NEMA 4-12, 14" x 12" x 6"	1
McMaster-Carr	5891T111	Electrical Hazard Warning Label	1
Mencom	PCG-1/2X	Cable Gland	1
Mencom	PCG-1/2	Cable Gland	2
Mencom	212PA	Nut	3
Autonics	LE4S	Digital Timer, 24-240VAC/VDC, Relay Output	1
Autonics	PG-08	8-Pin Socket	1
Emerson-Sola	SVL 2-24-100	Power Supply, Input 100-240VAC, Output 24VDC @2.1A	1
Sprecher+Schuh	CA7-16E-10-24E	Contactor	1
Sprecher+Schuh	CA7-PV-S11	Auxiliary Contact Block, 1NO/1NC	1
Sprecher+Schuh	CT7N-23-C12	Overload Relay 9.0 to 12.5A	1
WEG	CSW-BS5-WH	Pushbutton, Extended Black	1
WEG	CSW-BF2-WH	Pushbutton, Flush Green	1
WEG	CSW-BESG-WH	E-Stop Operator, Twist-To-Release, 42mm	1
WEG	AF3F	Mounting Flange	3
WEG	BCM01F-CSW	Contact Block, NC, Self-Monitoring	1
WEG	BC01F-CSW	Contact Block, NC	1
WEG	BC10F-CSW	Contact Block, NO	1
Sprecher+Schuh	D7-15YSE112	E-Stop Inscription Ring	1
WEG	MSW 40 B-3 H	Base Mounted 3 Pole Switch w/Handle & Shaft	1
Sprecher+Schuh	L9-15/2/D	Circuit Breaker, 15Amp, D-Curve	1
Sprecher+Schuh	L8-5/2/B	Circuit Breaker, 5 Amp, B-Curve	1
Sprecher+Schuh	L8-2/1/B	Circuit Breaker, 2 Amp, B-Curve	1
Sprecher+Schuh	V7-WG4	Ground Terminal	1
Sprecher+Schuh	V7-W4	Terminal	7
Sprecher+Schuh	V7-EA35	End Anchor	9
Sprecher+Schuh	V7-EB3	End Barrier	1
Sprecher+Schuh	V7-PP3	Partition	2
Sprecher+Schuh	V7-SM6X12	Marker Card	1
		Legend Plate, 0.75" x 0.75", "0/STOP"	1
		Legend Plate, 0.75" x 0.75", "|/START"	1
***FUNCTIONALLY EQUIVALENT COMPONENTS MAY BE SUBSTITUTED**			

TIMER SETTINGS		
PARAMETER	DISPLAY	SETTING
Output operation mode	outn	and
Time Range	trng	99h59m
Time UP/DOWN	U-d	dn
Width of min. input signal	int	20
Backlight	bLU	on
Key lock	LoCK	LoFF

THIS MATERIAL IS THE EXCLUSIVE PROPERTY OF MORSE MANUFACTURING COMPANY INC. AND MUST BE RETURNED TO MORSE IMMEDIATELY UPON REQUEST. THIS MATERIAL AND INFORMATION ILLUSTRATED OR CONTAINED HEREIN MAY NOT BE REPRODUCED, COPIED, USED, OR TRANSMITTED IN WHOLE OR IN PART IN ANY WAY WITHOUT THE PRIOR WRITTEN CONSENT OF MORSE MANUFACTURING COMPANY INC.

DRAWN BY	CHKD BY	DATE DRAWN	DATE CHKD
PCW	PCW	03/30/2022	12/17/2023

MORSE®
The Specialist In Drum Handling Equipment
103 Kuhn Rd, Syracuse, NY 13208
PHONE 315-564-4347 FAX 315-437-1029

TITLE	DWG NO.	SHEET	REV
MORSE 5949-P (ELECTRICAL) 208-230VAC 50/60HZ 1PH 2HP	AACI033022C	1 of 1	02