REVISIONS				
ZONE	REV	DESCRIPTION	DATE	APPROVED
152	01	E-Stop Circuit Revision, BOM Update	10/28/24	PCW
155	03	Electrial & BOM Revision (New Timer)	01/14/25	PCW

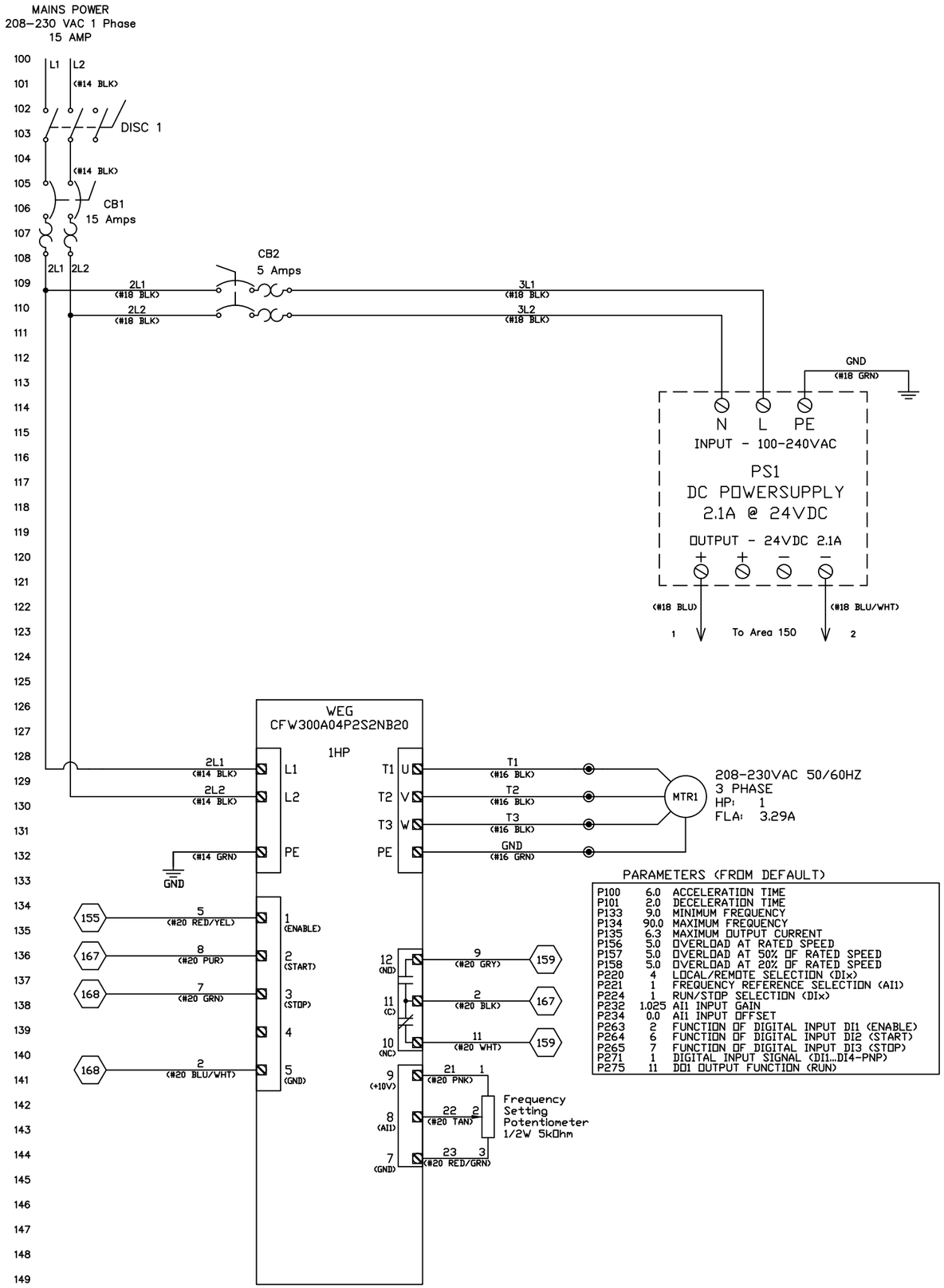

PARAMETERS (FROM DEFAULT)

P100	6.0	ACCELERATION TIME
P101	2.0	DECELERATION TIME
P133	9.0	MINIMUM FREQUENCY
P134	90.0	MAXIMUM FREQUENCY
P135	6.3	MAXIMUM OUTPUT CURRENT
P156	5.0	OVERLOAD AT RATED SPEED
P157	5.0	OVERLOAD AT 50% OF RATED SPEED
P158	5.0	OVERLOAD AT 20% OF RATED SPEED
P220	4	LOCAL/REMOTE SELECTION (DIx)
P221	1	FREQUENCY REFERENCE SELECTION (AI1)
P224	1	RUN/STOP SELECTION (DIx)
P232	1.025	AI1 INPUT GAIN
P234	0.0	AI1 INPUT OFFSET
P263	2	FUNCTION OF DIGITAL INPUT DI1 (ENABLE)
P264	6	FUNCTION OF DIGITAL INPUT DI2 (START)
P265	7	FUNCTION OF DIGITAL INPUT DI3 (STOP)
P271	1	DIGITAL INPUT SIGNAL (DI1...DI4-PNP)
P275	11	DO1 OUTPUT FUNCTION (RUN)

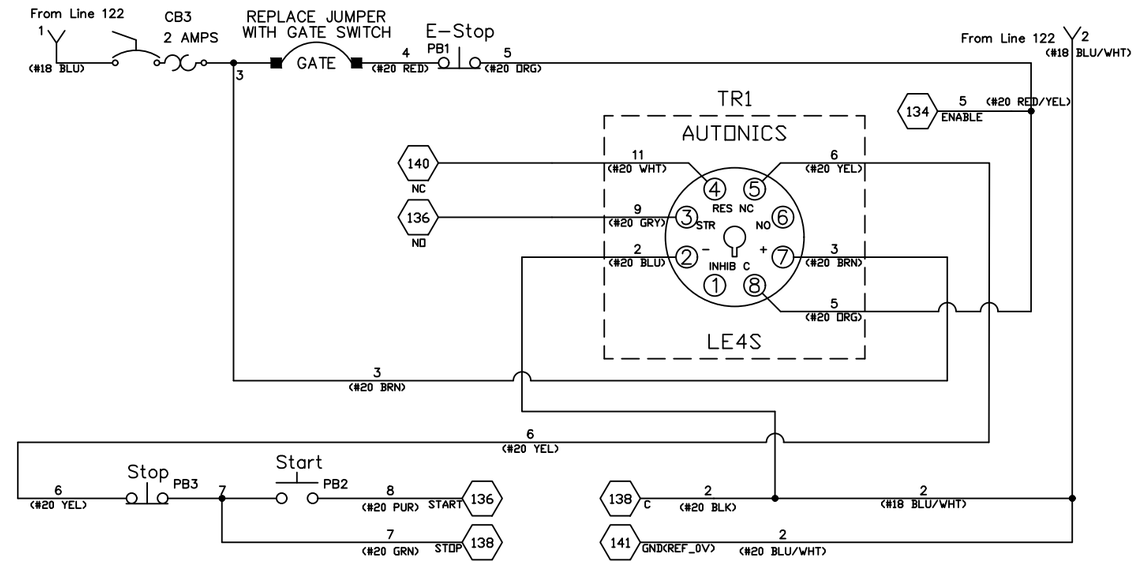

*MANUFACTURER	*PART NUMBER	DESCRIPTION	QUANTITY
Autonics	LE4S	Digital Timer, 24-240VAC/VDC, Relay Output	1
Autonics	PG-08	8-Pin Socket	1
Eurobex (EXM)	5412 ES161608	Enclosure, 16" x 16" x 8"	1
Emerson-Sola	SVL 2-24-100	Power Supply, Input 100-240VAC, Output 24VDC @2.1A	1
WEG	CFW300A04P2S2NB20	WEG CFW300 VFD, 1HP @ 230VAC 1-PHASE	1
Sprecher+Schuh	D7P-POT5A	Potentiometer, 5K	1
Sprecher+Schuh	D7P-E202PX01	Pushbutton, Extended Black "STOP", 1NC	1
Sprecher+Schuh	D7P-F301PX10	Pushbutton, Flush Green "START", 1NO	1
Sprecher+Schuh	D7P-MT44	E-Stop Operator, Twist-To-Release, 40mm	1
Sprecher+Schuh	D7-ALP	Latch, Plastic	1
Sprecher+Schuh	D7-X01S (D7-X01)	Contact Block, NC	1
WEG	MSW 40 B-3 H	Base Mounted 3 Pole Switch w/Handle & Shaft	1
WEG	MSW HS 185-40	Metal Operating Shaft	1
Sprecher+Schuh	D7-15YSE112	E-Stop Inscription Ring	1
Sprecher+Schuh	L9-15/2/D	Circuit Breaker, 15Amp, D-Curve	1
Sprecher+Schuh	L8-2/2/B	Circuit Breaker, 2Amp, B-Curve	1
Sprecher+Schuh	L8-2/1/B	Circuit Breaker, 2Amp, B-Curve	1
Iboco	OMEGA 3FAL1	DIN Rail, 35mm x 1meter	1
Iboco	T1-0510G	WIRE DUCT, 0.50" x 1.0" x 2M	1
Sprecher+Schuh	V7-WG4	Ground Terminal	2
Sprecher+Schuh	V7-W4	Terminal	11
Sprecher+Schuh	V7-EA35	End Anchor	11
Sprecher+Schuh	V7-EB3	End Barrier	2
Sprecher+Schuh	V7-PP3	Partition	2
Sprecher+Schuh	V7-SM6X12	Marker Card	1
Sprecher+Schuh	V7-CJ6-2	Center Jumper	2
McMaster-Carr	5891T111	Electrical Hazard Warning Label, 1-3/4"W x 2-1/2"H	1
		Legend Plate, 0.75" x 0.75", "0"	1
		Legend Plate, 0.75" x 0.75", "|"	1
		Legend Plate, 0.75" x 2.00", "MOTOR SPEED CONTROL"	1
*FUNCTIONALLY EQUIVALENT COMPONENTS MAY BE SUBSTITUTED			

TIMER SETTINGS		
PARAMETER	DISPLAY	SETTING
Output operation mode	outn	ond
Time Range	trnG	99h59m
Time UP/DOWN	U-d	dn
Width of min. input signal	int	20
Backlight	bLU	on
Key lock	LoCK	LoFF

THIS MATERIAL IS THE EXCLUSIVE PROPERTY OF MORSE MANUFACTURING COMPANY INC. AND MUST BE RETURNED TO MORSE IMMEDIATELY UPON REQUEST. THIS MATERIAL AND INFORMATION ILLUSTRATED OR CONTAINED HEREIN MAY NOT BE REPRODUCED, COPIED, USED, OR TRANSMITTED IN WHOLE OR IN PART IN ANY WAY WITHOUT THE PRIOR WRITTEN CONSENT OF MORSE MANUFACTURING COMPANY INC.

DRAWN BY	PCW
CHKD BY	PCW
DATE DRAWN	11/08/22
DATE CHKD	04/11/25

MORSE®
The Specialist In Drum Handling Equipment
103 Kuhn Rd, Syracuse, NY 13208
PHONE 315-564-4347 FAX 315-437-1029

TITLE	DWG NO.	SHEET	REV
MORSE 5556-P VFD PANEL (ELECTRICAL)	AACI110822A	1 of 1	02