REVISIONS				
ZONE	REV	DESCRIPTION	DATE	APPROVED
–	–	–	–	–

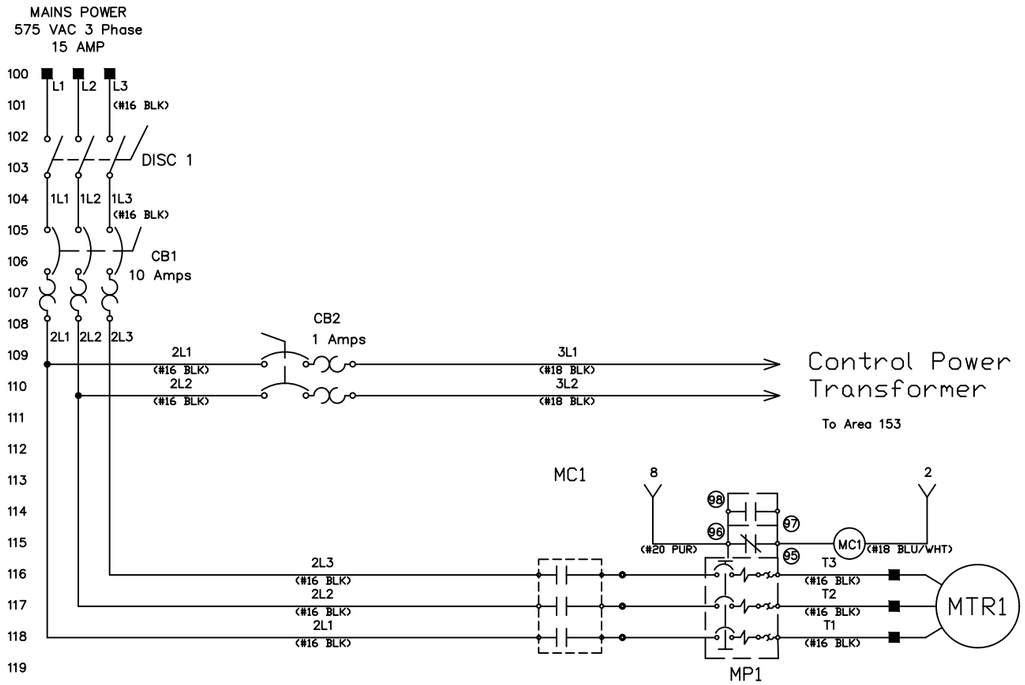

*MANUFACTURER	*PART NUMBER	DESCRIPTION	QUANTITY
Iboco	T1-0510G	WIRE DUCT	1
Iboco	OMEGA 3FAL1	DIN Rail	1
Eurobex (EXM)	5412 ESCH141208	Enclosure, NEMA 4-12, 14" x 12" x 8"	1
McMaster-Carr	5891T111	Electrical Hazard Warning Label	1
Mencom	PCG-1/2X	Cable Gland	1
Mencom	PCG-1/2	Cable Gland	2
Mencom	212PA	Nut	3
Autonics	LE4S	Digital Timer, 24-240VAC/VDC, Relay Output	1
Autonics	PG-08	8-Pin Socket	1
Emerson-Sola	SVL 2-24-100	Power Supply, Input 100-240VAC, Output 24VDC @2.1A	1
Sprecher+Schuh	CA8-09C-10-24D	Contactor	1
Sprecher+Schuh	CA8-P11	Auxiliary Contact Block, 1NO/1NC	1
Sprecher+Schuh	CT8-B20	Overload Relay 1.4 to 2.0A	1
Sprecher+Schuh	D7P-E202PX01	Pushbutton, Extended Black "STOP", 1NC	1
Sprecher+Schuh	D7P-F301PX10	Pushbutton, Flush Green "START", 1NO	1
Sprecher+Schuh	D7P-MT44	E-Stop Operator, Twist-To-Release, 40mm	1
Sprecher+Schuh	D7-ALP	Latch, Plastic	1
Sprecher+Schuh	D7-X01S	Guardian Contact Block, NC	1
Sprecher+Schuh	D7-15YSE112	E-Stop Inscription Ring	1
WEG	MSW 40 B-3 H	Base Mounted 3 Pole Switch w/Handle & Shaft	1
WEG	MSW HS 185-40	Metal Operating Shaft	1
Sprecher+Schuh	L9-10/3/D	Circuit Breaker, 10Amp, D-Curve	1
Sprecher+Schuh	L8-1/2/D	Circuit Breaker, 1Amp, D-Curve	1
Sprecher+Schuh	L8-2/1/B	Circuit Breaker, 2Amp, B-Curve	2
Sprecher+Schuh	V7-WG4	Ground Terminal	2
Sprecher+Schuh	V7-W4	Terminal	9
Sprecher+Schuh	V7-EA35	End Anchor	9
Sprecher+Schuh	V7-EB3	End Barrier	1
Sprecher+Schuh	V7-PP3	Partition	2
Sprecher+Schuh	V7-SM6X12	Marker Card	1
		Legend Plate, 0.75" x 0.75", "0"	1
		Legend Plate, 0.75" x 0.75", "|"	1
Hammond	SP150ACP	Hammond Control Transformer, 150VA, 600V PRI/120V SEC	1
Hammond	SPFG1	Hammond Finger Guard	2
*FUNCTIONALLY EQUIVALENT COMPONENTS MAY BE SUBSTITUTED			

TIMER SETTINGS		
PARAMETER	DISPLAY	SETTING
Output operation mode	outn	ond
Time Range	trnG	99h59m
Time UP/DOWN	U-d	dn
Width of min. input signal	Int	20
Backlight	bLU	on
Key lock	LoCK	LoFF

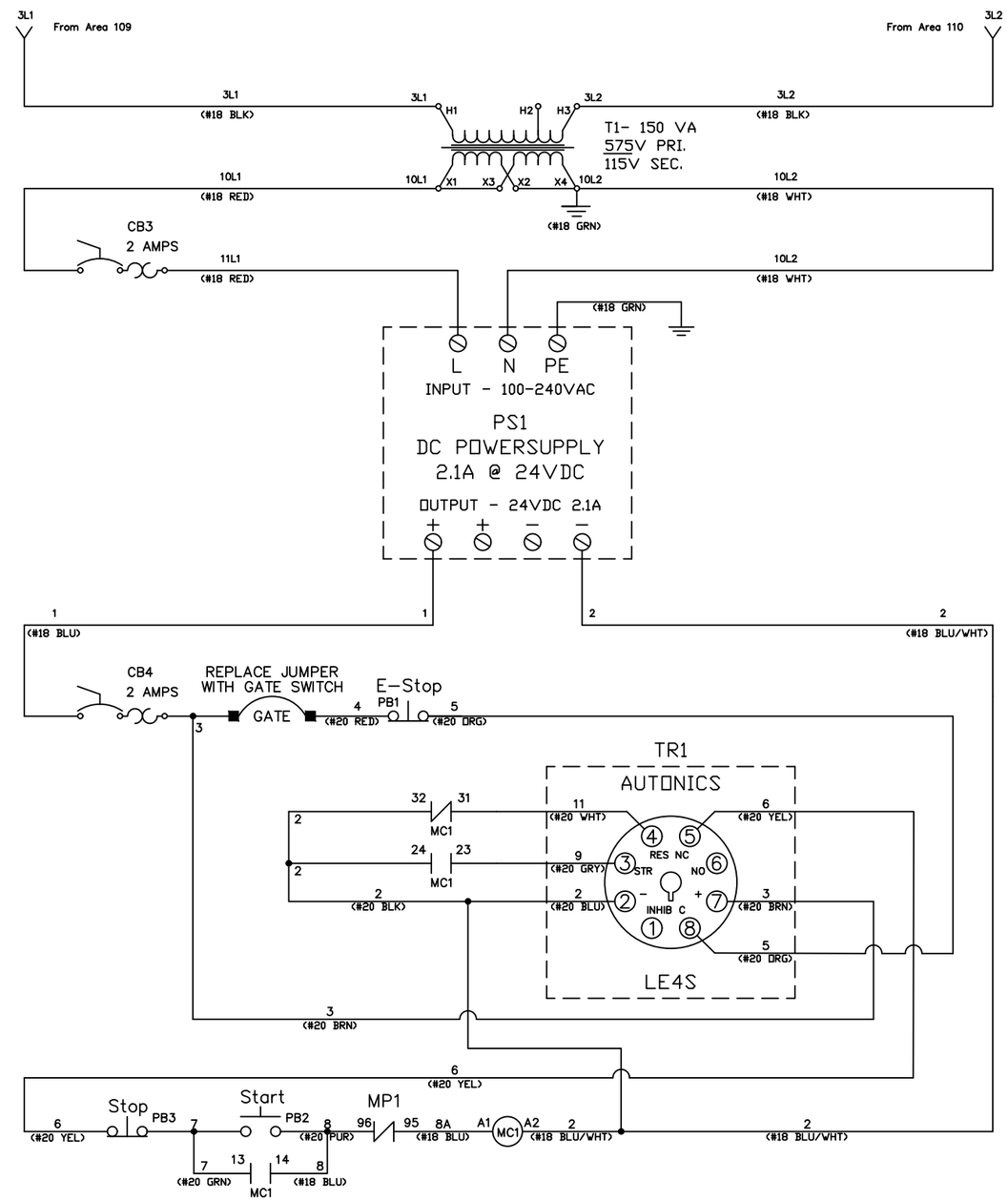

DRAWN BY	PCW
CHKD BY	PCW
DATE DRAWN	04/16/2025
DATE CHKD	04/16/2025

MORSE
The Specialist In Drum Handling Equipment
103 Kuhn Rd, Syracuse, NY 13208
PHONE 315-564-4347 FAX 315-437-1029

THIS MATERIAL IS THE EXCLUSIVE PROPERTY OF MORSE MANUFACTURING COMPANY INC. AND MUST BE RETURNED TO MORSE IMMEDIATELY UPON REQUEST. THIS MATERIAL AND INFORMATION ILLUSTRATED OR CONTAINED HEREIN MAY NOT BE REPRODUCED, COPIED, USED, OR TRANSMITTED IN WHOLE OR IN PART IN ANY WAY WITHOUT THE PRIOR WRITTEN CONSENT OF MORSE MANUFACTURING COMPANY INC.

TITLE	DWG NO.	SHEET	REV
MORSE 5950-P (ELECTRICAL) 575VAC 50/60HZ 3PH 1HP	AACI041625A	1 of 1	00