CONTENTS

- **Receiving Procedures**
- **Warranty**
- **Safety Information**
- **Machine Description**
- **Accessories**
- **START-UP Procedure**
- **Operating Instructions**
- **Maintenance**

Receiving Procedures

Every Morse drum handler is inspected prior to shipping. However, damage may be incurred during transit.

- Check for visible damage. If you choose to accept damaged freight, always sign noting the damage on the **BILL OF LADING**.
- Document the damage and have the truck driver sign. We recommend keeping a digital camera at your receiving dock for this purpose.
- Open packages expeditiously to check the condition of the goods. There is only a 24 hour window to notify the carrier of any concealed damage.
- **IMMEDIATELY REPORT ALL DAMAGE TO THE SHIPPING COMPANY!** Then you may contact Morse for assistance with your freight claim.
- Morse Manufacturing will not be held responsible for any damaged freight that is not signed for as damaged.

Machine Unpacking

Remove machine from pallet by lifting from the square tubing at the top of the unit. Insert a strap or chain through the tubing and make a loop to lift by. Attach loop to an overhead crane and raise slowly.

Limited 2 Year Warranty

Morse drum handling equipment is guaranteed against defects in workmanship or materials for **TWO YEARS** when used properly within its rated capacity. The warranty does not cover wear from normal use or damage from accident or abuse. Motors and other purchased parts carry the warranties of their manufacturers.

For warranty claims, contact your Morse Dealer to obtain a return authorization number, and for return freight advice. Return freight must be prepaid.

In all instances, liability is limited to the purchase price paid or to repairing or replacing the product. Customer assumes liability for any modifications, unauthorized repairs or parts substitution.

Safety Information

While Morse Manufacturing Co. drum handling equipment is engineered for safety and efficiency, a high degree of responsibility must be placed upon the machine operator to follow safe practices, based primarily on common sense, upon which true safety depends.

Failure to follow the safety precautions in this manual can result in personal injury or property damage. Observe the same precautions as with similar machinery where carelessness in operating or maintenance is hazardous to personnel. Carefully read the safety precautions below and throughout this manual.

Review the Material Safety Data Sheet(s) for the material(s) in the drum(s) and take all necessary precautions. Safety shoes, work gloves, hard hat and other personal protective devices are recommended.

Prior to initial use, inspect all moving parts and test rotation of drum holder. Perform necessary load test, inspections, operator training, etc.

DANGER - Indicates a situation which, if not avoided, will result in serious injury or death. This signal word is limited to the most extreme situations.

WARNING - Indicates a situation which, if not avoided, could result in serious injury or death.

CAUTION - Indicates a situation which, if not avoided, can result in damage to the machine.

	CAUTION – Do Not Transport with Drum Raised - ALWAYS LOWER THE DRUM HOLDER TO LOWEST POSITION BEFORE TRANSPORTING.
	DANGER - Stay Clear of Power Lines KEEP WELL CLEAR OF POWER LINES. Never approach a power line. Current in a high voltage line may arc some distance from the wire to the steel framed, grounded machine.
	WARNING - The Vertical-Lift Drum Pourer™ is designed to handle one drum of the types listed in the Machine Description. DO NOT attempt to handle any other type of drum or object. DO NOT exceed the weight capacity 800 Lb (363 kg).
	WARNING - Do Not Modify the Unit - Under no circumstances should any modifications be made to the Morse machinery without factory authorization. Any modifications may void the warranty. This machine was designed to perform a specific job and alterations may result in injury to operator or machine.
	WARNING – Level Floors Only - For operation only on clean, level floors of suitable bearing capacity. Do not use on sloped surfaces, ramps, irregular or debris strewn floors.
	WARNING - No Loose Fitting Clothing - Wear close-fitting clothing and safety equipment appropriate to the job. Loose fitting clothing may become caught on the machinery and cause severe personal injury.
	CAUTION - Hydraulic Fluid Under Pressure Can Be Hazardous Escaping hydraulic fluid under pressure can penetrate the skin, causing serious injury. Avoid the hazard by relieving pressure before disconnecting hydraulic lines. Keep hands and body away from pinholes and nozzles, which eject fluid under high pressure. Use a piece of cardboard to search for leaks. If an accident occurs, see a doctor immediately and inform them of the nature of the accident.
	CAUTION - Wear Safety Shoes - Wear safety shoes with non-slip soles and hard toe protection.
	WARNING - This product can expose you to chemicals including barium sulfate, cobalt, titanium dioxide, and 2-methylimidazole, which are known to the State of California to cause cancer, and bisphenol-A, which is known to the State of California to cause birth defects or other reproductive harm. For more information go to www.P65Warnings.ca.gov

Machine Description

The 515 Series Scale-Equipped Vertical-Lift Drum Pourer™ will pour a drum at up to 60” (152 cm) high, measured from the floor to the lowest point of a horizontal drum. It is designed to lift, transport, and dispense a ribbed 55-gallon (210 liter) steel drum 22.5” (56 cm) in diameter, as well as a fiber drum between 22” and 23.5” (56 to 59.7 cm) in diameter.

Maximum full-drum capacity is 800 Lb. (363 kg). Capacity is derated to 500 Lb. (227 kg) for a half-full drum. Half-full rating is based on the tilt mechanism’s capacity for handling an unbalanced bottom-heavy drum.

ACCESSORIES

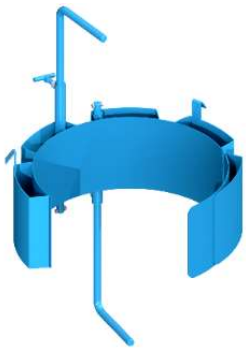

55/30 Series Diameter Adapters for drum with diameter smaller than 22” (56 cm). To handle a smaller drum, insert the correct size Diameter Adapter into the standard drum holder. See Diameter Adapter info at: https://morsedrum.com/products/diameter-adapters

All Diameter Adapters for drum with 17.5” (44.5 cm) diameter or smaller have integrated brackets to prevent drum slipping length-ways.

NOTE: To prevent 30-gallon (114 Liter) PLASTIC drum from slipping install ONE of the following

1. Diameter Adapter 55/30-19B which has integrated brackets
2. Diameter 55/30-19 **AND** Bracket 4556-P or Top Rim Clamp 4560B-P

IMPORTANT: To prevent a PLASTIC 30 to 55 gallon (114 to 210 Liter) size drum from slipping, you **MUST** install either Top Rim Clamp Kit or Bracket Assembly Kit.

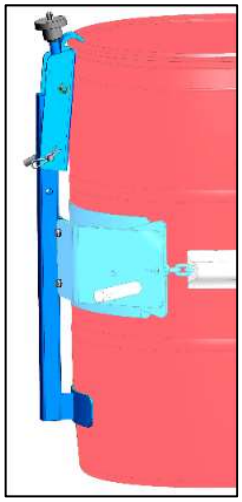

Top Rim Clamp Kit # 4560-P

Install the Top Rim Clamp Kit to handle a RIMMED plastic, steel or fiber drum with suitable top rim.

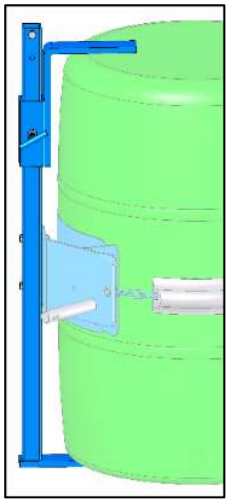

Bracket Assembly Kit # 4556-P

Install Bracket Assembly Kit to handle RIMLESS or RIMMED plastic drum

Controls

The Morse Vertical-Lift Drum Pourer is manually propelled and steered. The hydraulic pump is powered by a vane type air motor. The air motor is controlled by a momentary air valve located on the air motor. Attach air supply to the air valve. There are two functions for the operator to control (Figure 3.1):

1. LIFT and lower function for vertical positioning of the drum.
    - To raise the drum, hold the air valve handle in the on position and raise the LIFT handle. Release the two valve handles when desired drum height is reached.
    - To lower the drum, push in the LOWER handle. Air motor is not needed.

2. TILT function to control the degree of rotation of the drum.
    - To tilt the drum forward for pouring, hold the air valve handle in the on position and raise the TILT handle. Release the two valve handles when drum angle is reached.
    - To return the drum to vertical position, hold the air valve handle in the on position and push down on the TILT handle.

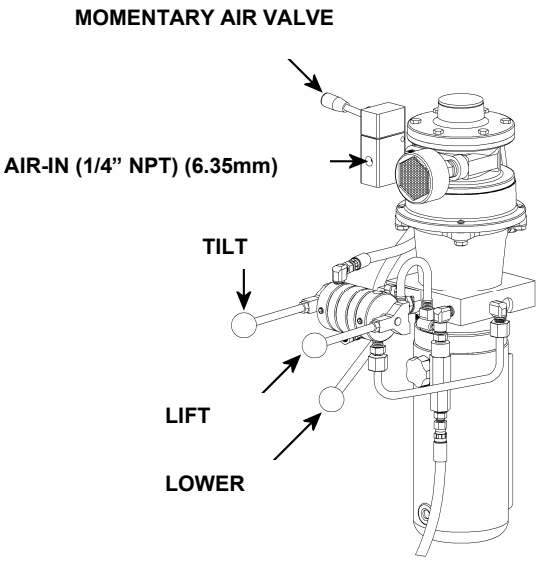

Figure 3.1

WARNING - Watch out for pinch points
Stay clear of moving parts. Operator should remain behind the push handle during the lift operation.

Floor Lock

The floor lock handle is located on the left side of the push handle. Pulling the floor lock handle toward the operator until it locks in the down position activates the floor lock. When the floor lock is activated it prevents unwanted free wheeling of the unit. Floor conditions determine the effectiveness of the floor lock. The operator should verify its holding action before depending on it to hold.

Drum Holder Assembly

The *MORSPEED*™ drum holder assembly is the component on the Vertical-Lift *MORSPEED*™ that is intended to hold the drum. The carriage assembly moves vertically along the mast, to position the *MORSPEED*™ drum holder assembly designed to secure a drum by gripping the top rim. The MORCINCH™ Drum Holder accepts accessories to handle plastic drum, fiber drum, or a smaller diameter drum.

Scale

Scale is simple to use and to read enabling accurate batching by weight. Touch pads include numbers for tare entry. Four load cells accurately sense weight regardless of drum tilt angle. Battery saving "sleep" mode turns indicator off when scale is not in use.

Display weight to 0.1 Lb. with accuracy of +/-0.2 %

Scale components will be installed and calibrated before leaving the Morse factory. However, the rigors of transportation may change scale calibration. To assure proper accuracy, the user should employ local scale service personnel to check the function and calibration of the scale. Cost of on-site calibration is not included in the selling price.

"T" Type
Intrinsically safe scale indicator for use in hazardous areas.

T-Type Scale
Features an intrinsically safe, ultra low power intensity (ULPI) indicator for use in many hazardous areas, approved for all classes, groups in division 2 of N.E.C. hazardous environment classifications. The hand pumped or air powered drum handler with this intrinsically safe weighing system may be used in many hazard areas where ordinary electric powered equipment would be prohibited.

"N" Type
scale indicator NOT for hazardous environments.

N-Type Scale
Economical general purpose instrument for use in a variety of weighing applications. NOT for use in hazardous areas. Powered by five ordinary alkaline D-cell batteries.

START-UP Procedure

1. Machine is shipped with hydraulic fluid. Install provided hydraulic control levers (threaded rods with black ball handles).
2. **IMPORTANT:** BEFORE operation, remove the **RED** shipping plug from the hydraulic reservoir, and replace with the provided **BLACK** breather.

Operating Instructions

1. Push Vertical-Lift Drum Pourer to drum.
2. Using "LIFT" control as described in "Machine Description - Controls", position drum holder assembly with back band at middle of drum. With ratchet plate swung open and cinch chain hanging from chain hook, push unit until back band rests firmly against drum. Some adjustment to tilt angle of saddle may be necessary to ensure band fits flush on drum. Engage floor lock.
3. **Attaching drum:** Drape cinch chain across front of drum and engage chain link into notch in ratchet (Figure 3.2). Turn ratchet clockwise to tighten cinch chain. If ratchet turns until pawl is beyond last ratchet tooth, turn ratchet back and slide next link into ratchet notch and try tightening again. Cinch chain must be held tightly against drum with pawl engaged securely in ratchet teeth.
4. Operate lift function to lift drum clear of floor. Disengage floor lock. Roll to dispensing location. NOTE: Do not allow drum to impact on floor, pouring station, etc. or spill or damage could occur.

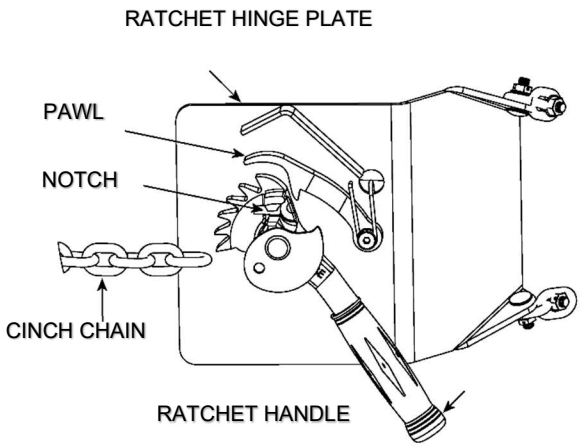

Figure 3.2

CAUTION – Do NOT transport with drum raised.
ALWAYS LOWER THE DRUM HOLDER TO LOWEST POSITION BEFORE TRANSPORTING. The unit can become unstable when transporting with a raised load.

5. Lift drum to desired pouring height. Operate tilt control as described in "Machine Description - Controls" to adjust drum attitude. Floor lock should be engaged while dispensing / draining.
6. When dispensing is complete, tilt drum back to upright position. Disengage floor lock and lower drum to transporting height; about 6" (15 cm) off the floor.

WARNING - Stay clear of raised drum
NEVER allow anyone to be below any part of a raised drum handler or drum. Remain behind the push handle while handling a drum.

WARNING – **Do NOT Disengage the Cinch Chain When Drum is off the Ground** When the drum is in the upright position, lower the drum to the floor before releasing the cinch chain.

7. Push unit to drum storage area and lower drum to the floor in upright position. Release cinch chain from ratchet by applying pressure to ratchet handle in clockwise direction with one hand and opening pawl to free ratchet with other hand. Remove cinch chain link from the ratchet.

Maintenance

- Periodic inspection for the general condition of structural and mechanical components is imperative for safe and efficient operation.
- Periodically inspect all moving parts, framework, drum holder and contact areas for signs of wear, fatigue, or loosening. Tighten, adjust, or replace parts as necessary to prevent failure and maintain proper function.
- Inspect the hydraulic system for oil drips, hose damage, or other signs of wear. Inspect the level of the hydraulic fluid. Replace any parts that show signs of wear.
- Grease wheel bearings periodically. Oil or grease all moving parts, including: the gears and sprockets in the tilt drive, and the ratchet and pawl.
- Worn or damaged parts must be properly replaced with the correct, genuine Morse parts.
- Hydraulic pump is shipped filled with Noco Premium plus automatic transmission fluid d/m. Material safety data sheet (msds) is available online. Change oil yearly, sooner depending on dirty conditions or outdoor use. Replace oil with Mobil dte 24 or equivalent for indoor use (Mobil dte 13 for outdoor use).