Model 15

Can Tipper

Serial Number 420979 to Current

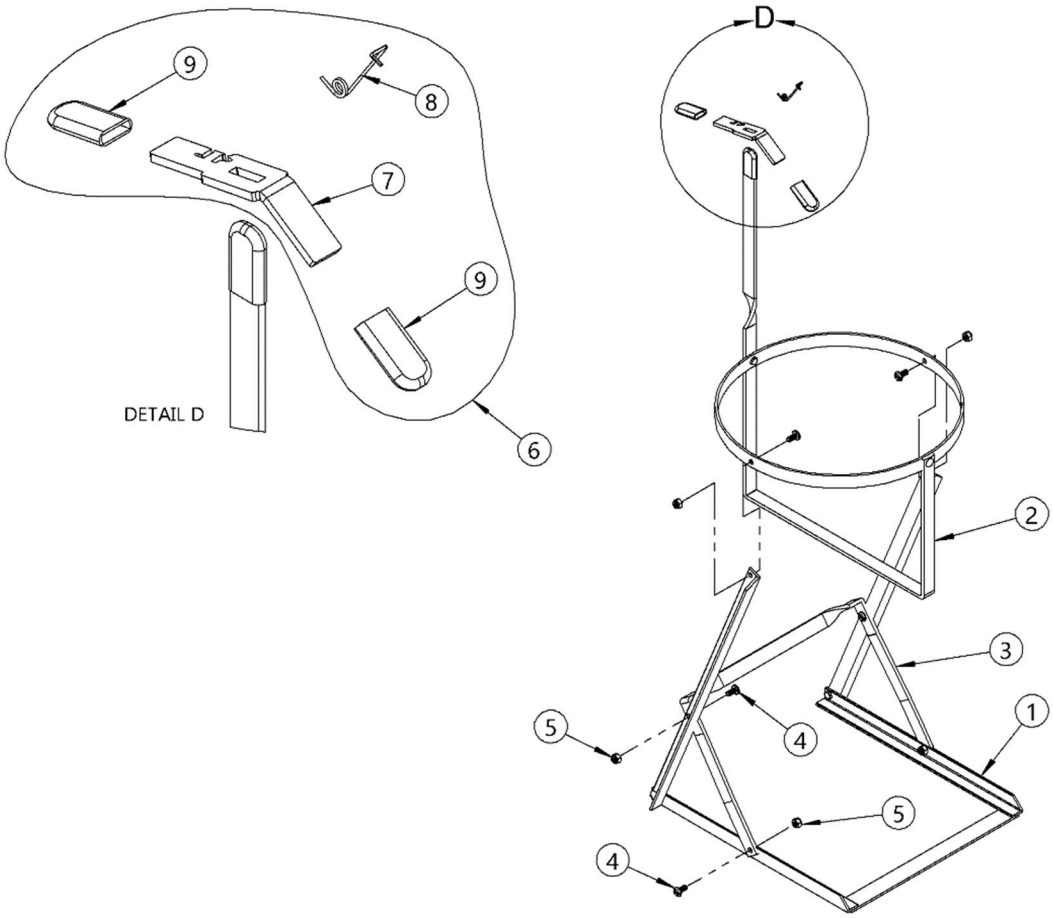

ITEM	QTY	PART	DESCRIPTION
1	1	4277-P	BASE ASM, 15-SS
2	1	2713-P	CAN HOLDER ASM, 15-SS
3	1	4281-P	CENTER BRACE, 15-SS
4	6	1517-P	SCREW, 1/4-20 X 5/8 PAN HD, SS
5	6	1518-P	NUT, 1/4-20 NYLON LOCK, SS
6	1	6799-P	CATCH ASM, 15-SS W/ SPRING
7	1	6800-P	CATCH PIECE, 15-SS
8	1	6801-P	SPRING, SS, CATCH ASM, 15
9	2	4234-P	CAP, PLASTIC, HANDLE, CATCH 15

Copyright – Morse Mfg. Co., Inc.