REVISIONS				
ZONE	REV	DESCRIPTION	DATE	APPROVED
N/A	01	UPDATED WIRE SIZE/MARKINGS	03/06/17	PCW
N/A	02	CIRCUIT REDESIGN, BOM CHANGE	07/19/17	PCW
N/A	03	Electrical Circuit & BOM Revision (Safety Relay)	09/09/25	PCW

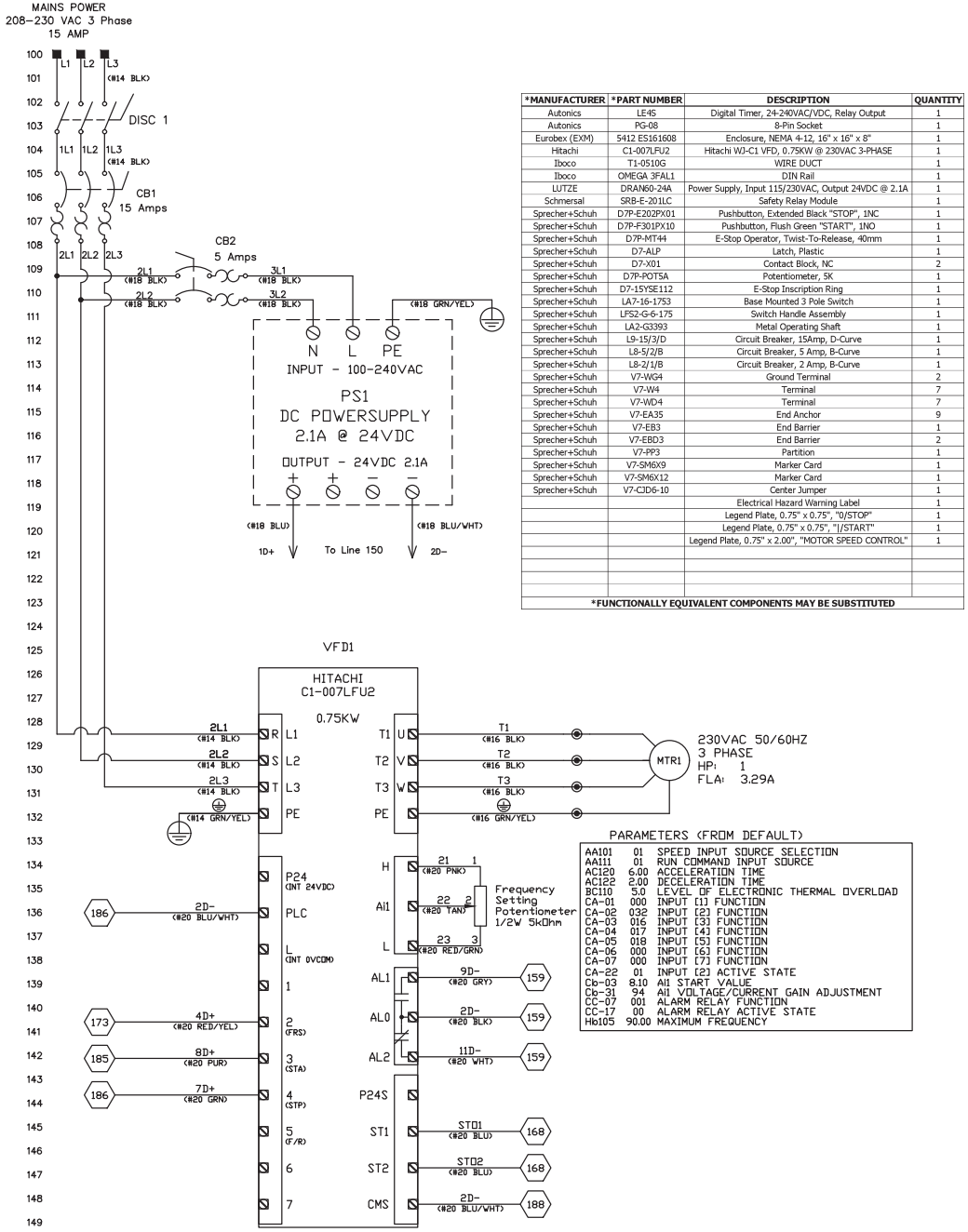

*MANUFACTURER	*PART NUMBER	DESCRIPTION	QUANTITY
Autonics	LE4S	Digital Timer, 24-240VAC/VDC, Relay Output	1
Autonics	PG-08	8-Pin Socket	1
Eurobex (EXM)	5412 ES161608	Enclosure, NEMA 4-12, 16" x 16" x 8"	1
Hitachi	C1-007LFU2	Hitachi WJ-C1 VFD, 0.75KW @ 230VAC 3-PHASE	1
Iboco	T1-0510G	WIRE DUCT	1
Iboco	OMEGA 3FAL1	DIN Rail	1
LUTZE	DRAN60-24A	Power Supply, Input 115/230VAC, Output 24VDC @ 2.1A	1
Schmersal	SRB-E-201LC	Safety Relay Module	1
Sprecher+Schuh	D7P-E202PX01	Pushbutton, Extended Black "STOP", 1NC	1
Sprecher+Schuh	D7P-F301PX10	Pushbutton, Flush Green "START", 1NO	1
Sprecher+Schuh	D7P-MT44	E-Stop Operator, Twist-To-Release, 40mm	1
Sprecher+Schuh	D7-ALP	Latch, Plastic	1
Sprecher+Schuh	D7-X01	Contact Block, NC	2
Sprecher+Schuh	D7P-POT5A	Potentiometer, 5K	1
Sprecher+Schuh	D7-15YSE112	E-Stop Inscription Ring	1
Sprecher+Schuh	LA7-16-1753	Base Mounted 3 Pole Switch	1
Sprecher+Schuh	LFS2-G-6-175	Switch Handle Assembly	1
Sprecher+Schuh	LA2-G3393	Metal Operating Shaft	1
Sprecher+Schuh	L9-15/3/D	Circuit Breaker, 15Amp, D-Curve	1
Sprecher+Schuh	L8-5/2/B	Circuit Breaker, 5 Amp, B-Curve	1
Sprecher+Schuh	L8-2/1/B	Circuit Breaker, 2 Amp, B-Curve	1
Sprecher+Schuh	V7-WG4	Ground Terminal	2
Sprecher+Schuh	V7-W4	Terminal	7
Sprecher+Schuh	V7-WD4	Terminal	7
Sprecher+Schuh	V7-EA35	End Anchor	9
Sprecher+Schuh	V7-EB3	End Barrier	1
Sprecher+Schuh	V7-EBD3	End Barrier	2
Sprecher+Schuh	V7-PP3	Partition	1
Sprecher+Schuh	V7-SM6X9	Marker Card	1
Sprecher+Schuh	V7-SM6X12	Marker Card	1
Sprecher+Schuh	V7-CJD6-10	Center Jumper	1
		Electrical Hazard Warning Label	1
		Legend Plate, 0.75" x 0.75", "0/STOP"	1
		Legend Plate, 0.75" x 0.75", "I/START"	1
		Legend Plate, 0.75" x 2.00", "MOTOR SPEED CONTROL"	1

*FUNCTIONALLY EQUIVALENT COMPONENTS MAY BE SUBSTITUTED

PARAMETERS (FROM DEFAULT)

AA101	01	SPEED INPUT SOURCE SELECTION
AA111	01	RUN COMMAND INPUT SOURCE
AC120	6.00	ACCELERATION TIME
AC122	2.00	DECELERATION TIME
BC110	5.0	LEVEL OF ELECTRONIC THERMAL OVERLOAD
CA-01	000	INPUT [1] FUNCTION
CA-02	032	INPUT [2] FUNCTION
CA-03	016	INPUT [3] FUNCTION
CA-04	017	INPUT [4] FUNCTION
CA-05	018	INPUT [5] FUNCTION
CA-06	000	INPUT [6] FUNCTION
CA-07	000	INPUT [7] FUNCTION
CA-22	01	INPUT [2] ACTIVE STATE
Cb-03	8.10	AI1 START VALUE
Cb-31	94	AI1 VOLTAGE/CURRENT GAIN ADJUSTMENT
CC-07	001	ALARM RELAY FUNCTION
CC-17	00	ALARM RELAY ACTIVE STATE
Hb105	90.00	MAXIMUM FREQUENCY

TIMER SETTINGS		
PARAMETER	DISPLAY	SETTING
Output operation mode	outn	ond
Time Range	trnG	99h59m
Time UP/DOWN	U-d	dn
Width of min. input signal	int	20
Backlight	bLU	on
Key lock	LoCK	Loff

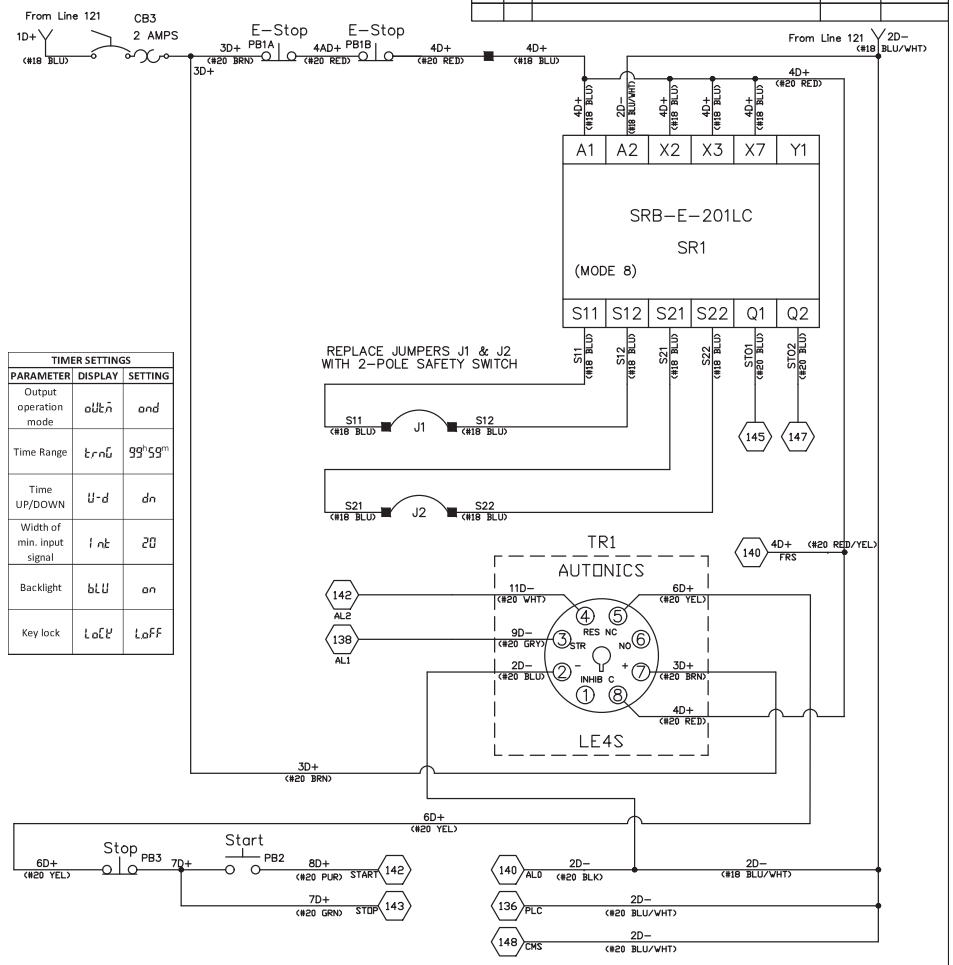

THIS MATERIAL IS THE EXCLUSIVE PROPERTY OF MORSE MANUFACTURING COMPANY INC AND MUST BE RETURNED TO MORSE IMMEDIATELY UPON REQUEST. THIS MATERIAL AND INFORMATION ILLUSTRATED OR CONTAINED HEREIN MAY NOT BE REPRODUCED, COPIED, USED, OR TRANSMITTED IN WHOLE OR IN PART IN ANY WAY WITHOUT THE PRIOR WRITTEN CONSENT OF MORSE MANUFACTURING COMPANY INC.

DRAWN BY	PCW
CHKD BY	PCW
DATE DRAWN	02/16/2017
DATE CHKD	09/09/2025

MORSE®
The Specialist In Drum Handling Equipment
103 Kuhn Rd, Syracuse, NY 13208
PHONE 315-564-4347 FAX 315-437-1029

TITLE	DWG NO.	SHEET	REV
MORSE 5557-P (ELECTRICAL) 208-230VAC 50/60HZ 3PH 1HP	AACI042722A	1 of 1	03