MORSE®
The Specialist In Drum Handling Equipment

Model # 160M

4-Wheel Drum Truck with Spark Resistant Parts

Parts List and Diagram for Model 160M 4-Wheel Drum Truck with Spark Resistant Parts with Serial Number 1215 to ____

Assembly Instructions

1. Insert Hook Weld (item 6) into tube of drum truck base with holes aligned.
2. Install handle onto drum truck base. Secure with 2 screws (item 9) using 7/32” hex wrench.

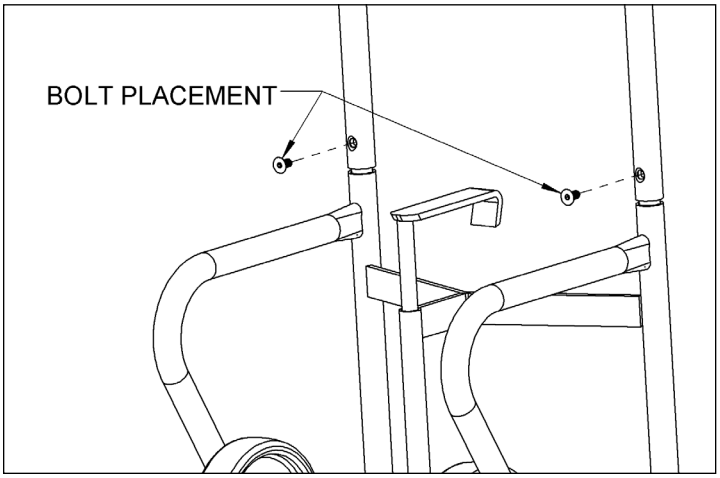

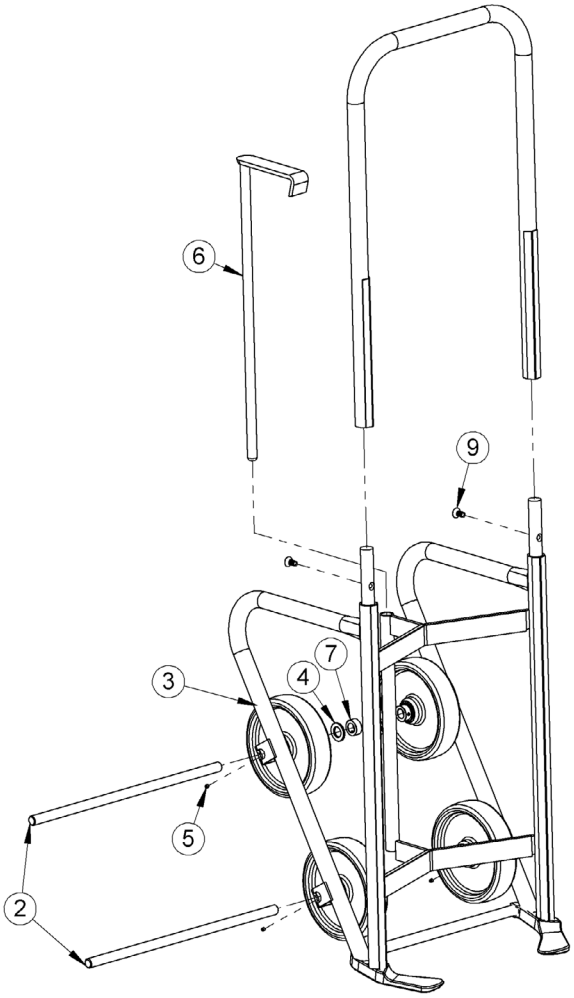

For replacement parts, please contact your Morse dealer.

When ordering parts, please specify:

- Part number and description
- Model number

IMPORTANT NOTE

4-Digit serial numbers are simply the month & year of manufacture

Example: 0802 is August 2002

WARNING: This product can expose you to chemicals including barium sulfate, cobalt, titanium dioxide, and 2-methylimidazole, which are known to the State of California to cause cancer, and bisphenol-A, which is known to the State of California to cause birth defects or other reproductive harm.

For more information go to www.P65Warnings.ca.gov

ITEM NO.	PART NUMBER	DESCRIPTION	QTY.
2	1355-P	AXLE, 19.75", 160	2
3	87-P	WHEEL, MORTUF, 8", 3/4" BRG	4
4	55-P	WASHER, 3/4 SAE FL 1-1/2 OD	4
5	1000-P	SET SCREW, 1/4 - 20 X 1/4	4
6	5941M-P	HOOK WELD, SR, 160M	1
7	15-P	COLLAR, 3/4" ID	4
9	4685-P	SHCS, 3/8-16 X 3/4 FH	2

morsedrum.com | service@morsedrum.com | (315) 437-8475 | 103 Kuhn Rd. Syracuse, NY 13208 U.S.A.

Copyright 2021 - Morse Mfg. Co., Inc.